Analog to Digital Conversion - Pulse Code and Delta Modulation

- Many Signals in Modern Communication Systems are digital. Also, analog signals are transmitted digitally.
- Reduced distortion and improvement in signal to noise ratios.
- PAM, PWM , PPM , PCM and DM.

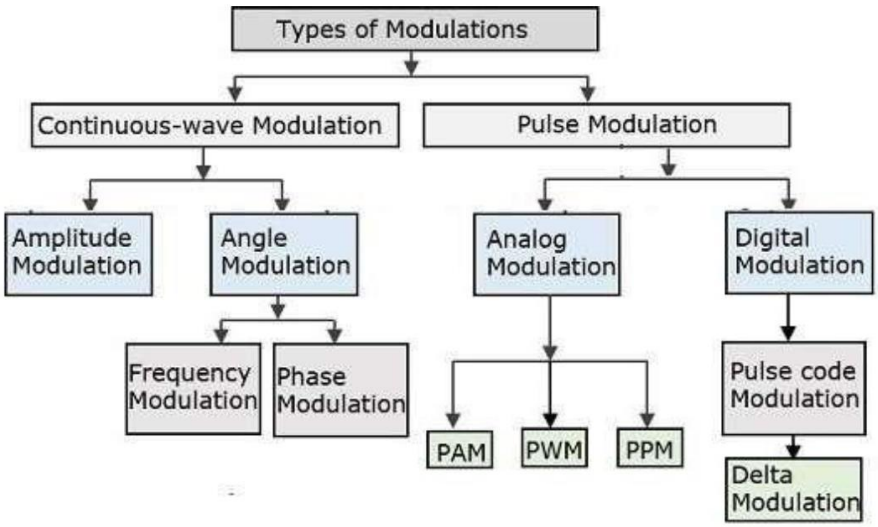

The message signal is the signal which is being transmitted for communication and the carrier signal is a high frequency signal which has no data, but is used for long distance transmission.

There are many modulation techniques, which are classified according to the type of modulation employed. Of them all, the digital modulation technique used is Pulse Code Modulation (PCM).

A signal is pulse code modulated to convert its analog information into a binary sequence, i.e., 1s and 0s. The output of a PCM will resemble a binary sequence. The following figure shows an example of PCM output with respect to instantaneous values of a given sine wave.

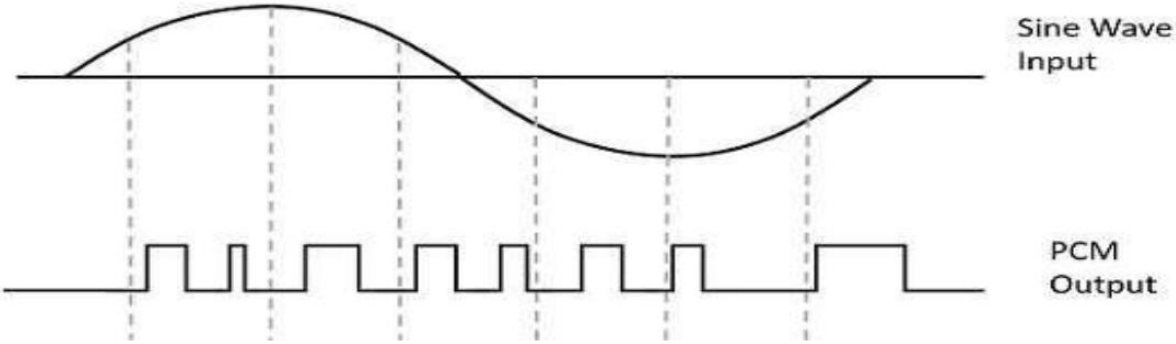

In Pulse Code Modulation, the message signal is represented by a sequence of coded pulses. This message signal is achieved by representing the signal in discrete form in both time and amplitude.

Basic Elements of PCM

Basic of PCM

The transmitter section of a Pulse Code Modulator circuit consists of Sampling, Quantizing and Encoding, which are performed in the analog-to-digital converter section. The low pass filter prior to sampling prevents aliasing of the message signal.

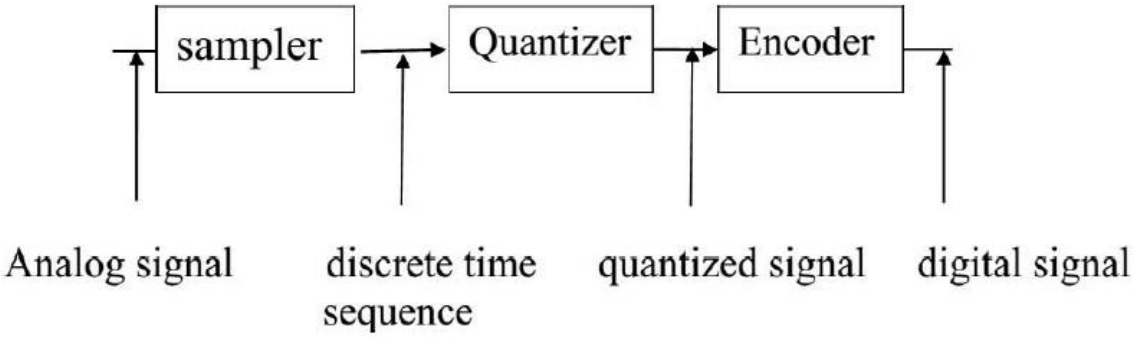

The basic operations in the receiver section are regeneration of impaired signals, **decoding, and reconstruction** of the quantized pulse train. Following is the block diagram of PCM which represents the basic elements of both the transmitter and the receiver sections.

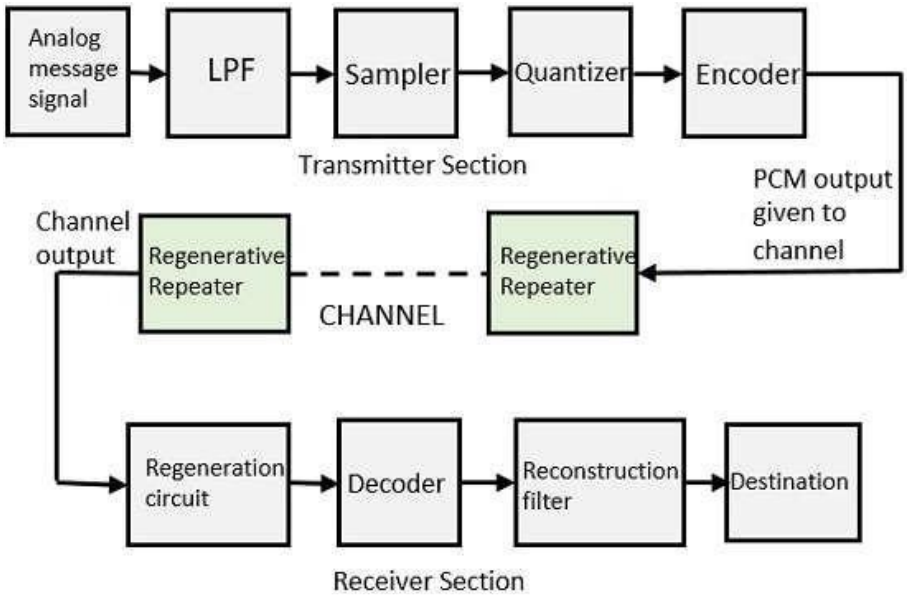

- **Low Pass Filter**

This filter eliminates the high frequency components present in the input analog signal which is greater than the highest frequency of the message signal, to avoid aliasing of the message signal.

- **Sampler**

This is the technique which helps to collect the sample data at instantaneous values of message signal, so as to reconstruct the original signal. The sampling rate must be **greater than twice the highest frequency** component W of the message signal, in accordance with the sampling theorem.

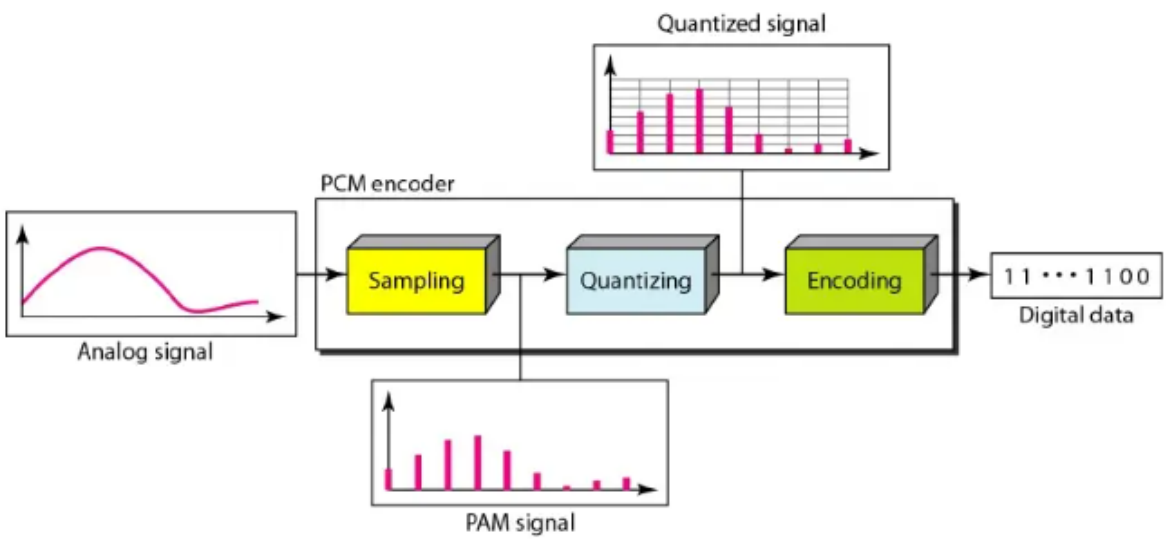

Definition: Sampling is defined as —The process of measuring the instantaneous values of continuous-time signal in a discrete form.

- Sample is a piece of data taken from the whole data which is continuous in the time domain.
- When a source generates an analog signal and if that has to be digitized, having 1s and 0s i.e., High or Low, the signal has to be discretized in time. This discretization of analog signal is called as Sampling.

The following figure indicates a continuous-time signal x(t) and a sampled signal $x_s(t)$. When x(t) is multiplied by a periodic impulse train,

the sampled signal $x_s(t)$ is obtained.

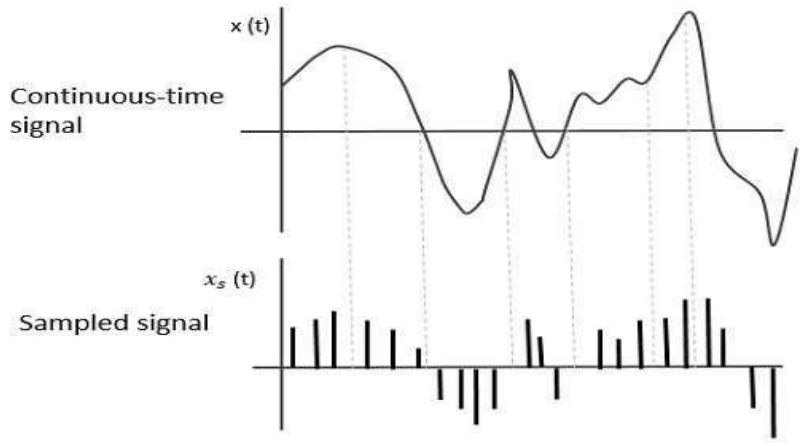

Sampling Rate

To discretize the signals, the gap between the samples should be fixed. That gap can be termed as a sampling period Ts.

Sampling Frequency fs=1/Ts

Where,

Ts is the sampling time

fs is the sampling frequency or the sampling rate

Sampling frequency -is the reciprocal of the sampling period. This sampling frequency, can be simply called as **Sampling rate**. The sampling rate denotes the number of samples taken per second, or for a finite set of values.

For an analog signal to be reconstructed from the digitized signal, the sampling rate should be highly considered. The rate of sampling should be such that the data in the message signal should neither be lost nor it should get over-lapped. Hence, a rate was fixed for this, called as Nyquist rate.

Nyquist Rate

Suppose that a signal is band-limited with no frequency components higher than f_m Hertz. That means, W is the highest frequency. For such a signal, for effective reproduction of the original signal, sampling rate should be twice the highest frequency.

This means,

$$fs=2\ f_m$$

Where,

fs is the sampling rate

f_m is the highest frequency

This rate of sampling is called as Nyquist rate.

A theorem called, Sampling Theorem, was stated on the theory of this Nyquist rate.

Different types of sampling methods

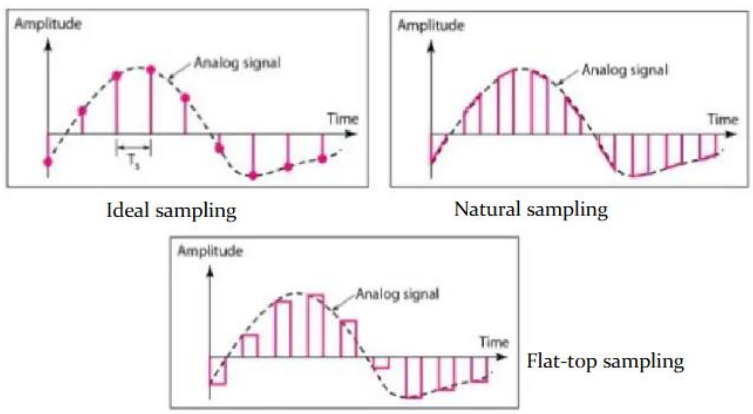

For the continuous-time signal **x (t)**, the band-limited signal in frequency domain, can be represented as shown in the following figure.

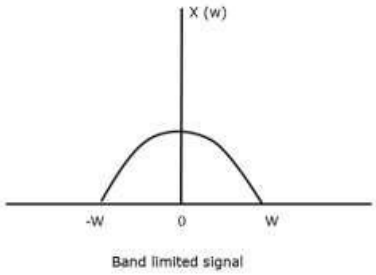

We need a sampling frequency, a frequency at which there should be no loss of information, even after sampling. For this, we have the Nyquist rate that the sampling frequency should be two times the maximum frequency. It is the critical rate of sampling.

If the signal x(t) is sampled above the Nyquist rate, the original signal can be recovered, and if it is sampled below the Nyquist rate, the signal cannot be recovered.

The following figure explains a signal, if sampled at a higher rate than 2 f_m in the frequency domain.

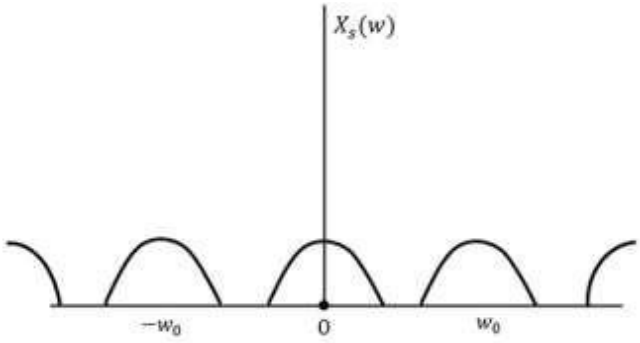

Let us see what happens if the sampling rate is equal to twice the highest frequency (2 f_m) That means,

$$Fs = 2\ f_m$$

Where,

Fs is the sampling frequency

f_m is the highest frequency

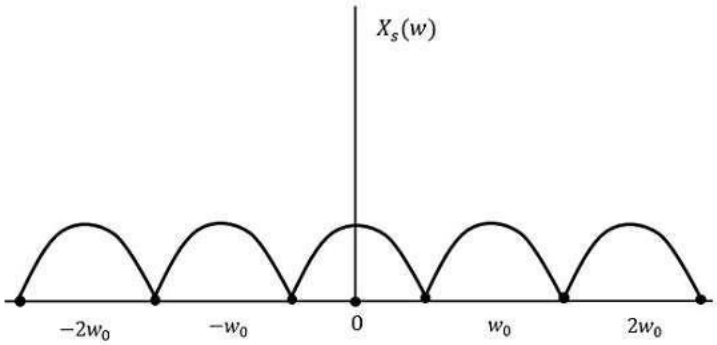

The result will be as shown in the above figure. The information is replaced without any loss. Hence, this is also a good sampling rate.

Now, let us look at the condition,

$$Fs < 2\ f_m$$

The resultant pattern will look like the following figure

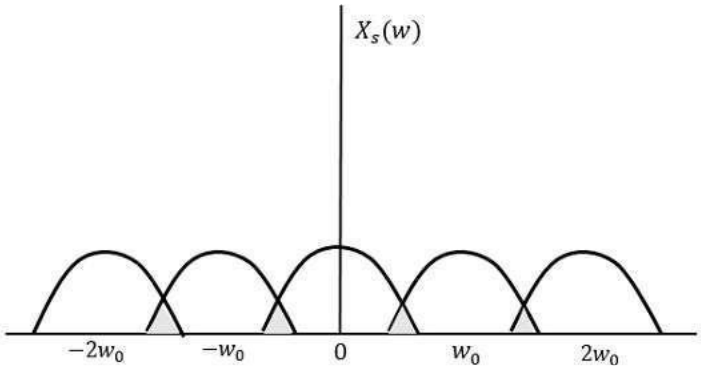

We can observe from the above pattern that the over-lapping of information is done, which leads to mixing up and loss of information. This unwanted phenomenon of over-lapping is called as Aliasing.

Quantizer

Quantizing is a process of reducing the excessive bits and confining the data. The sampled output when given to Quantizer reduces the redundant bits and compresses the value.

Quantizing an Analog Signal

The analog-to-digital converters perform this type of function to create a series of digital values out of the given analog signal. The following figure represents an analog signal. This signal to get converted into digital has to undergo sampling and quantizing.

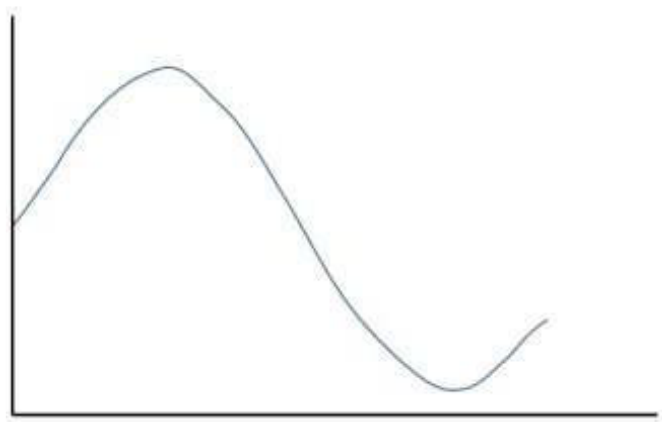

The quantizing of an analog signal is done by discretizing the signal with a number of quantization levels.

Quantization is representing the sampled values of the amplitude by a finite set of levels, which means converting a continuous-amplitude sample into a discrete-time signal.

The following figure shows how an analog signal gets quantized. The blue line represents analog signal while the brown one represents the quantized signal.

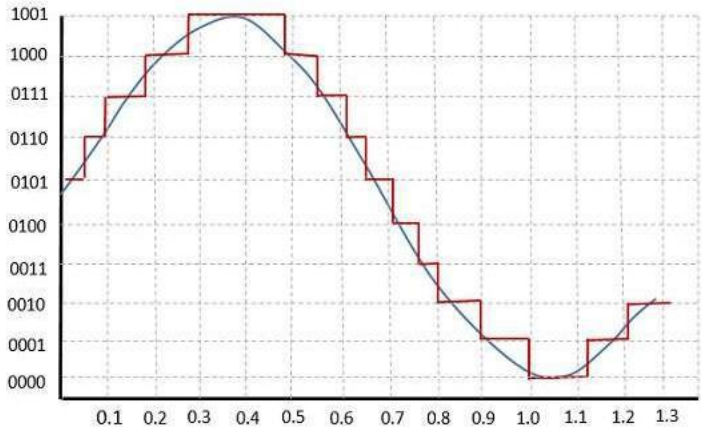

Both sampling and quantization result in the loss of information. The quality of a Quantizer output depends upon the number of quantization levels used. The discrete amplitudes of the quantized output are called as **representation levels or reconstruction levels**. The spacing between the two adjacent representation levels is called a **quantum or step-size**.

The following figure shows the resultant quantized signal which is the digital form for the given analog signal.

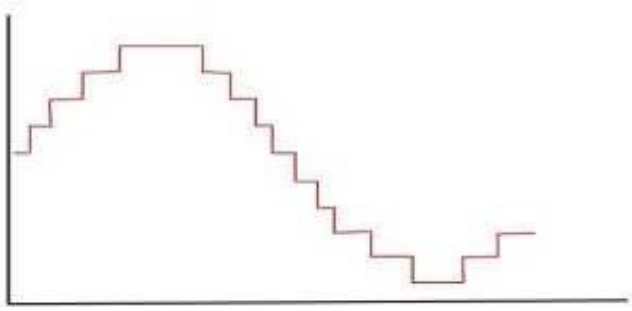

This is also called as Stair-case waveform, in accordance with its shape.

Types of Quantization

There are two types of Quantization - **Uniform Quantization and Non-Uniform Quantization**

1. The type of quantization in which the quantization levels are uniformly spaced is termed as a **Uniform Quantization**.
2. The type of quantization in which the quantization levels are unequal and mostly the relation between them is logarithmic, is termed as a **Non-Uniform Quantization**.

There are two types of uniform quantization.

1. Mid-Rise type

2. Mid-Tread type

The following figures represent the two types of uniform quantization

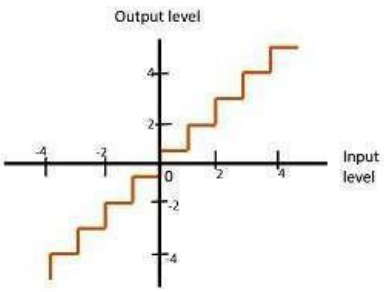

Fig 1 : Mid-Rise type Uniform Quantization

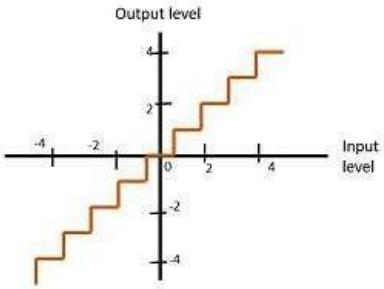

Fig 2 : Mid-Tread type Uniform Quantization

Figure 1 shows the mid-rise type and figure 2 shows the mid-tread type of uniform quantization.

1. The Mid-Rise type is so called because the origin lies in the middle of a raising part of the stair- case like graph. The quantization levels in this type are even in number.
2. The Mid-tread type is so called because the origin lies in the middle of a tread of the stair-case like graph. The quantization levels in this type are odd in number.

Quantization Error

- For any system, during its functioning, there is always a difference in the values of its input and output.
- The processing of the system results in an error, which is the difference of those values. The difference between an input value and its quantized value is called a **Quantization Error**.

COMPANDING IN PCM SYSTEMS

The word Companding is a combination of Compressing and Expanding, which means that it does both. This is a non-linear technique used in PCM which compresses the data at the transmitter and expands the same data at the receiver. The effects of noise and crosstalk are reduced by using this technique.

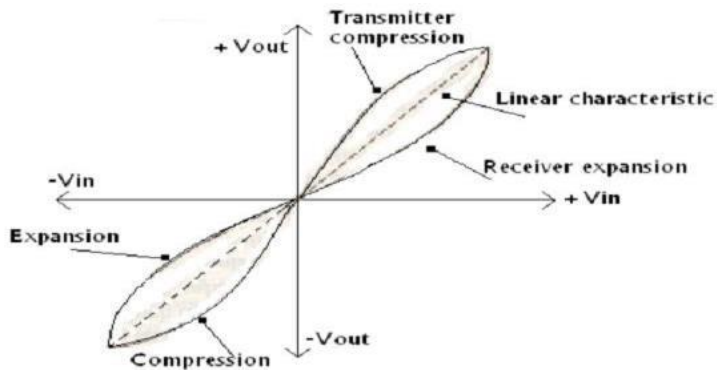

There are two types of Companding techniques. They are –

1. **A-law Companding Technique**

I. Uniform quantization is achieved at A = 1, where the characteristic curve is linear and no compression is done.

II. A-law has mid-rise at the origin. Hence, it contains a non-zero value.

2. **μ-law Companding Technique**

I. Uniform quantization is achieved at μ = 0, where the characteristic curve is linear and no compression is done.

II. μ-law has mid-tread at the origin. Hence, it contains a zero value.

Encoder

Encoder assigns code words to quantized sampled values. This coding techniques uses bits 0 and 1. If number of quantized levels are 16 then each sample is assigned with 4 bit code word.

Regenerative repeater:

The PCM has an ability to control the distortion and noise caused by the transmission of bits along the channel. This ability is accomplished by several regenerative repeaters located at sufficient placing along channel.

Decoder

Decoder reboots all the received bits to make more words then it decodes as quantized PAM signals.

Reconstruction Filter:

All coded words are passed through low pass filter so that analog signal can be reconstructed from quantized PAM signal. The cut off frequency of low pass filter is f_m Hz which is equal to band width of message signal.

Destination

It receives the signal from the reconstructive filter output is analog signal.

Difference in **PCM & DM**

- **Pulse Code Modulation (PCM):**

  It is the technique used for reworking analog signals into digital signals. PCM has agood or sensible signal-to-noise ratio. For transmission, Pulse Code Modulation wants high transmitter bandwidth.

- **Delta Modulation(DM):**

  Delta modulation is a technique which provides a staircase approximation to an oversampled version of the message signal (analog input).

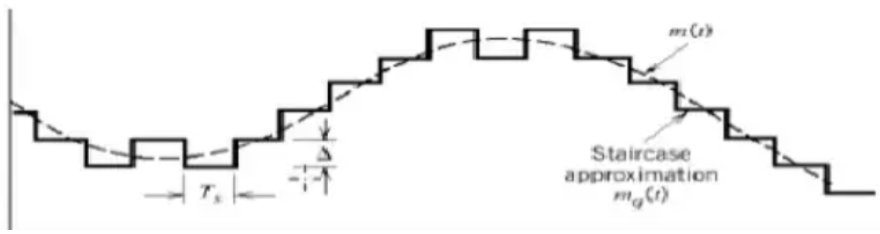

With delta modulation an analog input is approximated by a staircase function that moves up or down by one quantization level (**+Δ,- Δ**) at each sampling interval(Ts) the important characteristic of this staircase function is that its behavior is binary:

Thus, the output of the delta modulation process can be represented as a single binary digit for each sample. A bit stream is produced by approximating the derivative of an analog signal rather than its amplitude:

A 1 is generated if the staircase function is to go up during the next interval: a 0 is generated otherwise

Delta Modulation

Nyquist rate or frequency is defined as the minimum rate at which a finite bandwidth signal needs to be sampled to retain all of the information. In order to get a comparatively better sampling rate in the differential pulse code modulation process, the signal's sampling rate is maintained higher than the Nyquist rate.

In the Differential Pulse Code Modulation (DPCM) process, when the sampling interval is reduced, the sample-to-sample amplitude difference

becomes small, like the difference is of 1-bit quantization. Hence the step-size will be very small.

Delta modulation is a process mainly used in the transmission of voice information. It is a technique where analog-to-digital and digital-to-analog signal conversion are seen. Delta modulation (DM) is an easy way of DPCM. In this technique, the difference between consecutive signal samples is encoded into n-bit data streams. In DM, the data which is to be transmitted is minimized to a 1-bit data stream.

Delta Modulation(DM) Operation

- The analog input is compared to the most recent value of the approximating staircase function
- If the value of analog input exceeds that of the staircase function, a 1 is generated otherwise, a 0 is generated
- Thus, the staircase is always changed in the direction of the input signal

DM Block Diagram

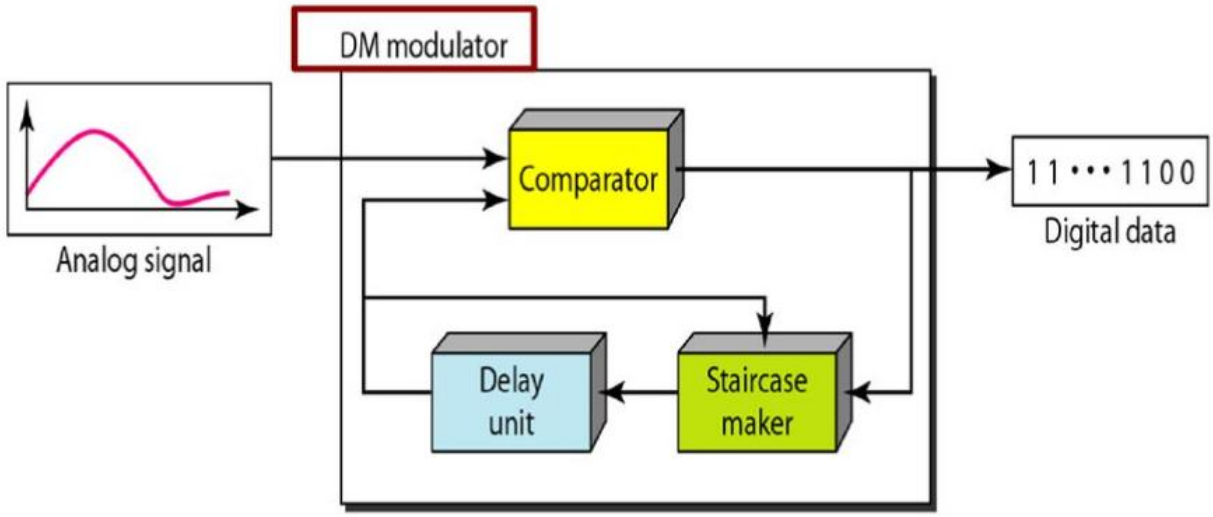

As the above figure illustrates. Δ must be chosen to produce a balance between two types of errors or noise.

- When the analog waveform is changing very slowly. There will be quantizing noise this noise increases as Δ is increased.
- On the other hand when the analog waveform is changing more rapidly than the staircase can follow there is slope overload noise shown in figure below this noise increases as Δ decreased.

It should be clear that the accuracy of the scheme can be improved by increasing the sampling rate however, this increases the data rate of the output signal or using adaptive delta modulation (ADM).

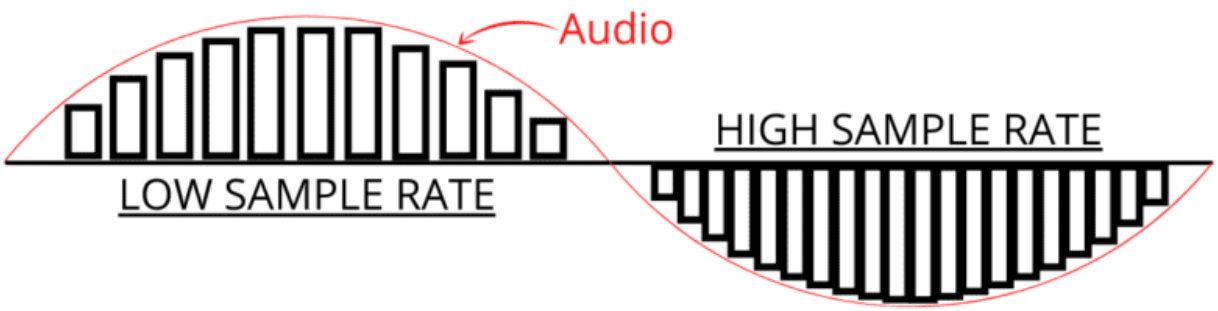

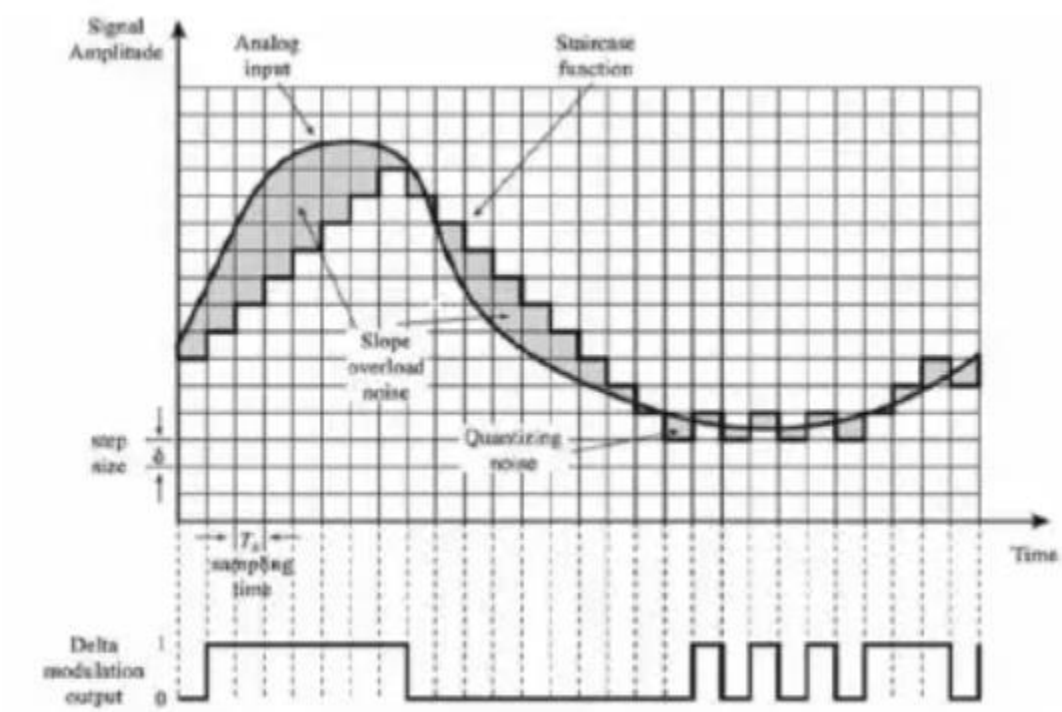

S.NO	PCM	DM
1.	PCM stands for Pulse Code Modulation.	DM stands for Delta Modulation.
2.	In PCM, feedback does not exist in transmitter or receiver.	While in DM, feedback exists in transmitter.
3.	Per sample 4, 8, or 16 bits are used.	Here, only one bit is used per sample.
4.	PCM requires highest transmitter bandwidth.	DM requires lowest transmitter bandwidth.
5.	PCM is complex in terms of complexity of implementation.	While DM is simple in terms of complexity of implementation.
6.	PCM has good signal to noise ratio.	While DM has poor signal to noise ratio.
7.	PCM is costly.	DM is cheap.
8.	PCM may be a technique wont to digitally represent sampled analog signals.	Digital to analog and analog to digital converter.
9.	In PCM, signal requires encoder and decoder both sides.	In DM, signal can modulate and demodulate.
10.	PM is mostly used in video telephony and audio telephony.	DM is mostly used in speeches as well as images.

Modem

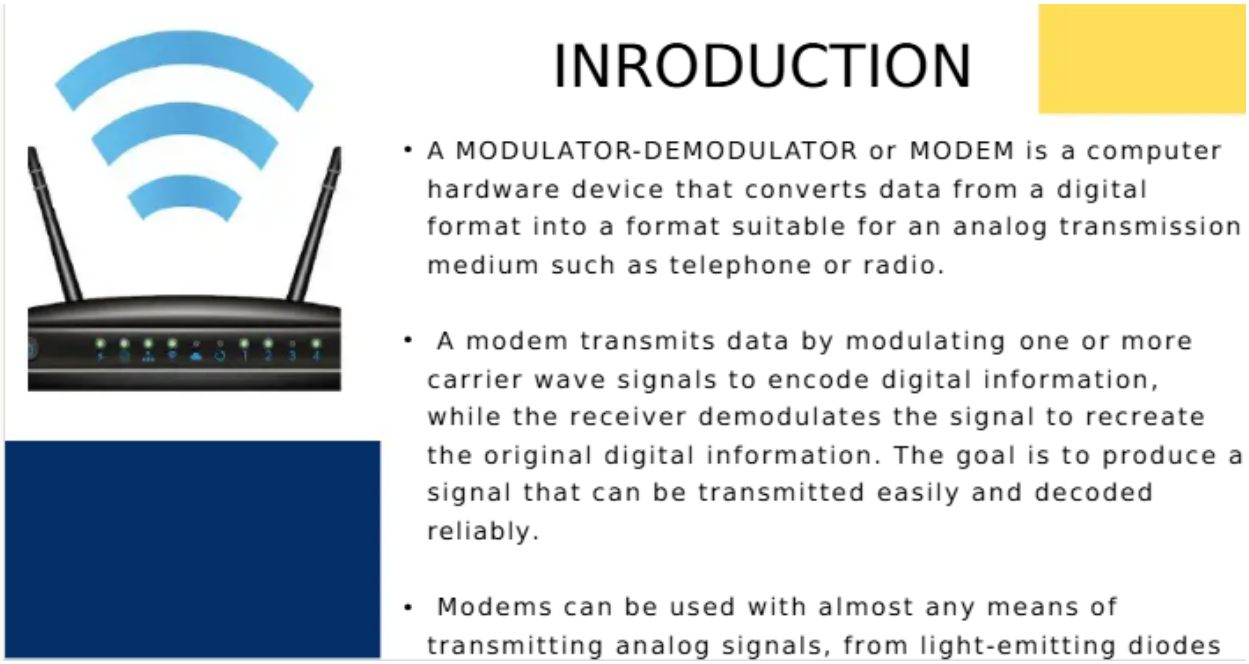

A modem (modulator-demodulator) is a device that modulates an analog carrier signal to encode digital information, and also demodulates such a carrier signal to decode the transmitted information. The goal is to produce a signal that can be transmitted easily and decoded to reproduce the original digital data.
Modems can be used with any means of transmitting analog signals, from light emitting diodes to radio.
The most familiar example is a voice band modem that turns the digital data of a personal computer into modulated electrical signals in the voice frequency range of a telephone channel. These signals can be transmitted over telephone lines and demodulated by another modem at the receiver side to recover the digital data.

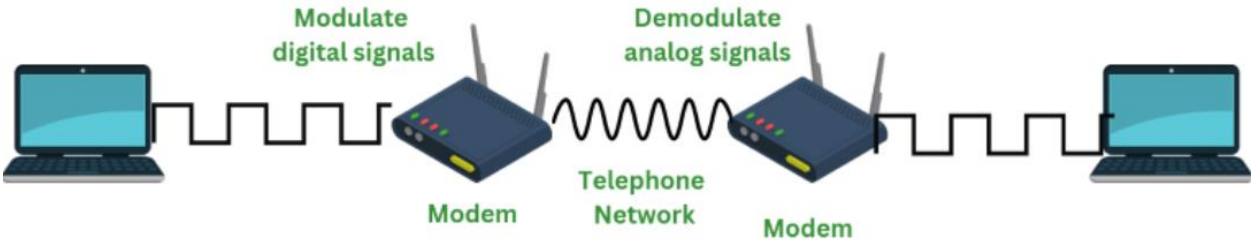

Modems are generally classified by the amount of data they can send in a given unit of time, usually expressed in bits per second (bit/s, or bps), or bytes per second (B/s). Modems can alternatively de classified by their symbol rate, measured in baud. The baud unit denotes symbols per second, or the number of times per second the modem sends a new signal.

While the modem interfaces are standardized, a number of different protocols for formatting data to be transmitted over telephone lines exist.

56K Modem (Modem 56)

The 56K modem refers to a dial-up modem capable of achieving a maximum data rate of 56 kbps (kilobits per second) over standard telephone lines

Feature	Description
Max Speed	Up to **56 kbps** download, ~33.6 kbps upload
Connection Type	**Dial-up** via standard telephone line (PSTN)
Technology Used	Analog-Digital hybrid system (PCM downstream, analog upstream)
Typical Use Case	Internet access, fax, and basic data communication
Year Popularized	Mid-to-late 1990s

Why Called "Modem"?
Modulator-Demodulator:

Modulation: Converts digital data to analog for transmission over phone lines.

Demodulation: Converts incoming analog signals back to digital data.

Working

- Computer connects to the modem using a serial port or USB.
- The modem dials the phone number of an Internet Service Provider (ISP).
- Data from the ISP's digital network is sent to your modem using Pulse Code Modulation (PCM) at up to 56 kbps.
- Modem converts the digital signal into analog to send it through the phone line and decodes incoming signals back into digital form.

ISP (Digital Network)
↓
Digital Data → PCM → Telephone Network → Analog Line → Modem → Your Computer

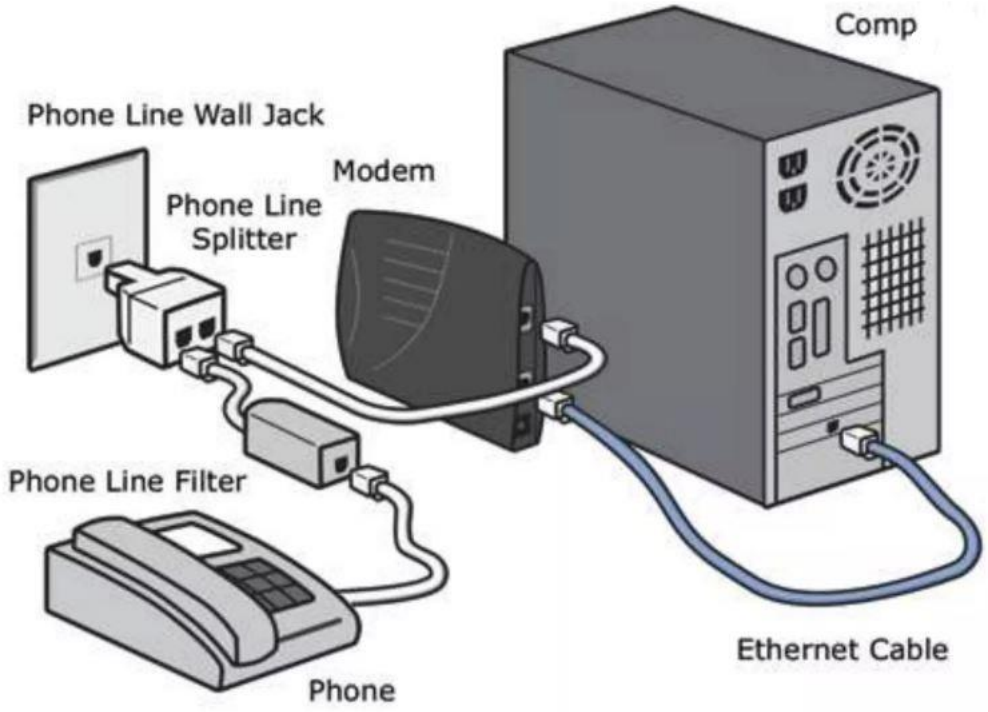

Types of Modem

There are different types of modems available. Each modem has different features and provides with different benefits. Below are the different types of modems:

1. Optical Modem

In modem, different type of media is used to transfer the signals. Optical Modem is the type of modem that makes use of optical cables instead of using another metallic type of media. The digital data is converted into the pulse of light that is transmitted on the optical fiber used in the optical Modem.

2. Digital Modem

Digital Modem is defined as a type of modem that is used to convert digital data into digital signals. Digital data is in form of 0s and 1s. For this, it performs the process of modulation. Digital Modem modulates the digital data on digital carrier signals for transmission.

3. Cable Modem

Cable modems are defined as a type of modem used to establish a communication between computer systems and the Internet Service Providers. A cable modem helps to access high-speed data through cable TV networks. Such modems are usually connected to desktops or systems and work like external devices.

4. Satellite Modem

Satellite Modems are defined as a type of modem that provides with the internet connection through satellite dishes. This type of modem works by sending the input bits into output radio signals and vice versa. The internet network that is provided by such types of modems is more reliable and efficient as compared to other types of modems.

5. Dial Modem

A Dial Modem is a type of modem that converts data used in telephone and data used on computers. In short dial modem converts between analog form and digital form. The networking devices connected to the computer are all at one end and the telephone line is at another end.

Types of modems based on installation

A modem that is installed inside a computer system, usually on a motherboard slot or as a built-in chip.

Internal Modem

Internal Modem is the device installed in the desktop or laptop computer to communicate over a network with other connected computers. These are cheaper than external modems as they do not require a power supply or a chassis.

- Installed on a PCI/PCIe slot or built-in on the motherboard. No separate power supply needed (draws power from the computer).
- Controlled via software (driver and operating system).
- Uses the computer's COM (serial) port or USB internally for communication.

External modems

External modems are the simplest type of the modem to install this kind of modem you didn't open the computer. The telephone line plugs into a socket on the rear panel of the modem. As external modems have their own power supply you can turn off the modem quickly to break the connection.

The examples of these modems are the DSL modems which are used in the broadband connections.

PC Card Modem:

These modems, designed for portable computers, are the size of a credit card and fit into the PC Card slot on notebook and handheld computers. These modems are removed when the modem is not needed. Except for their size, PC Card modems are like a combination of external and internal modems. These devices are plugged directly into an external slot in the portable computer. So no cable is required other than the telephone line connection. The cards are powered by the computer. which is fine unless the computer is battery-operated. Running a PC Card modem while the portable computer is operating on battery power drastically decreases the life of your batteries.

MODEM	ROUTERS
Brings Internet to your home	Brings Internet to your devices
Has public IP address	Assigns local IP address
Uses a WAN network	Creates a LAN network

DPSK (Differential Phase Shift Keying)

Definition:

DPSK is a digital modulation technique in which the phase of the carrier signal is modulated based on the difference between the current and previous data bits, instead of the absolute phase.

Key Concept:
In PSK (Phase Shift Keying), the receiver must know the exact phase reference.

DPSK avoids this need by encoding data using phase difference:

Bit 1 → Change the phase (usually by 180° or π radians).

Bit 0 → Keep the same phase.

Working Principle:
Transmitter Side:

First bit: Assume initial phase (reference).

For each next bit:

If data bit is 1 → Invert phase (shift by 180°).

If data bit is 0 → Keep phase same as previous symbol.

Receiver Side:

- Compares current symbol with previous symbol.
- If phase change detected → bit 1.
- If no phase change → bit 0.
- No need for carrier phase synchronization.

Advantages:
- Simple receiver (no carrier synchronization needed).
- More resistant to phase ambiguity issues.
- Suitable for wireless and optical communication.

Disadvantages:
- Slightly lower noise performance compared to coherent PSK (higher bit error rate).
- Error propagation: One wrong detection may affect subsequent bits.

Applications:

Bluetooth.
Wireless LAN (early versions).
Optical fiber communication (DPSK is popular in high-speed optical systems).

Quadrature Phase Shift Keying (QPSK)

The Quadrature Phase Shift Keying (QPSK) is a variation of BPSK, and it is also a Double Side Band Suppressed Carrier (DSBSC) modulation scheme, which sends two bits of digital information at a time, called as digits.

Instead of the conversion of digital bits into a series of digital stream, it converts them into bit pairs. This decreases the data bit rate to half, which allows space for the other users.

QPSK Modulator

The QPSK Modulator uses a bit-splitter, two multipliers with local oscillator, a 2-bit serial to parallel converter, and a summer circuit. Following is the block diagram for the same.

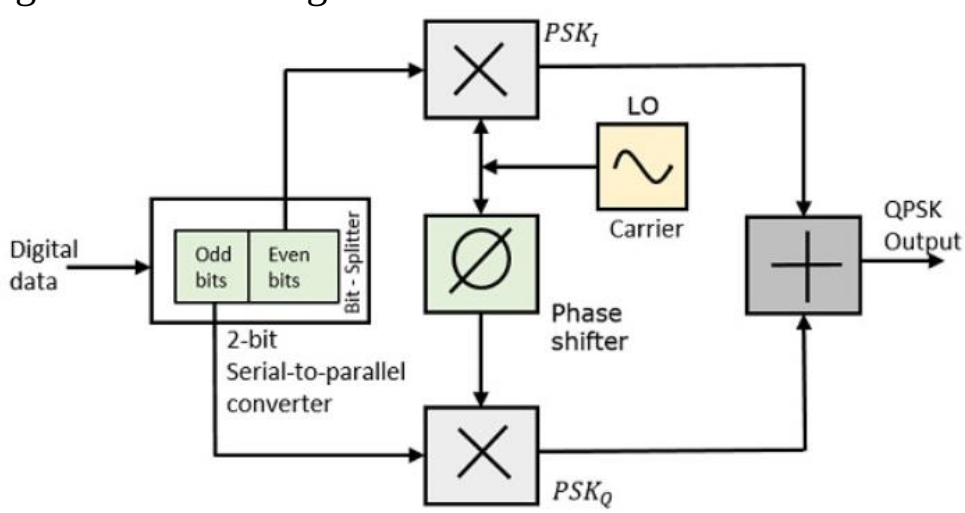

At the modulators input, the message signals even bits (i.e., 2nd bit, 4th bit, 6th bit, etc.) and odd bits (i.e., 1st bit, 3rd bit, 5th bit, etc.) are separated by the bit's splitter and are multiplied with the same carrier to generate odd BPSK (called as PSK_I) and even BPSK (called as PSK_Q). The PSK_Q signal is anyhow phase shifted by 90° before being modulated.

The QPSK waveform for two-bits input is as follows, which shows the modulated result for different instances of binary inputs.

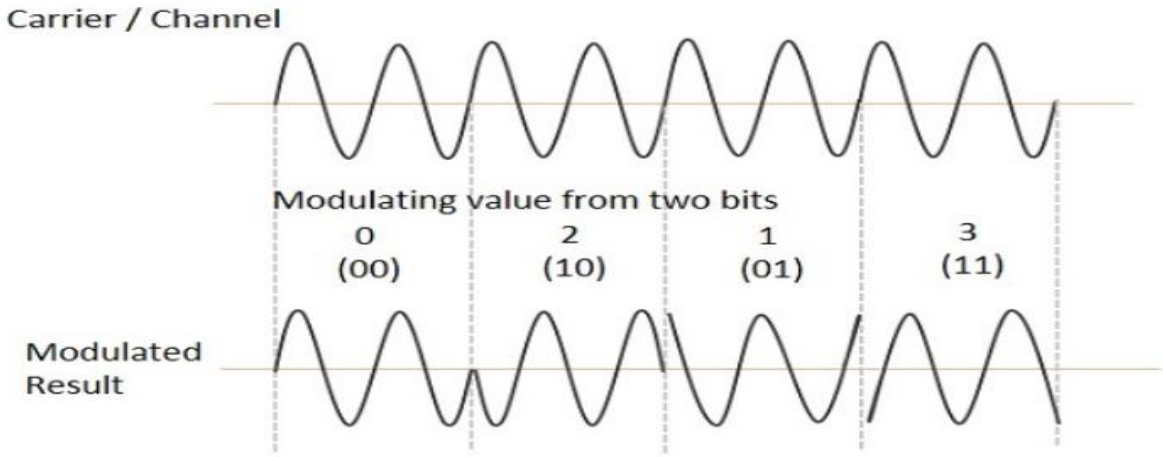

Differential Phase Shift Keying (DPSK)

In Differential Phase Shift Keying (DPSK) the phase of the modulated signal is shifted relative to the previous signal element. No reference signal is considered here. The signal phase follows the high or low state of the previous element. This DPSK technique doesn't need a reference oscillator.

The following figure represents the model waveform of DPSK.

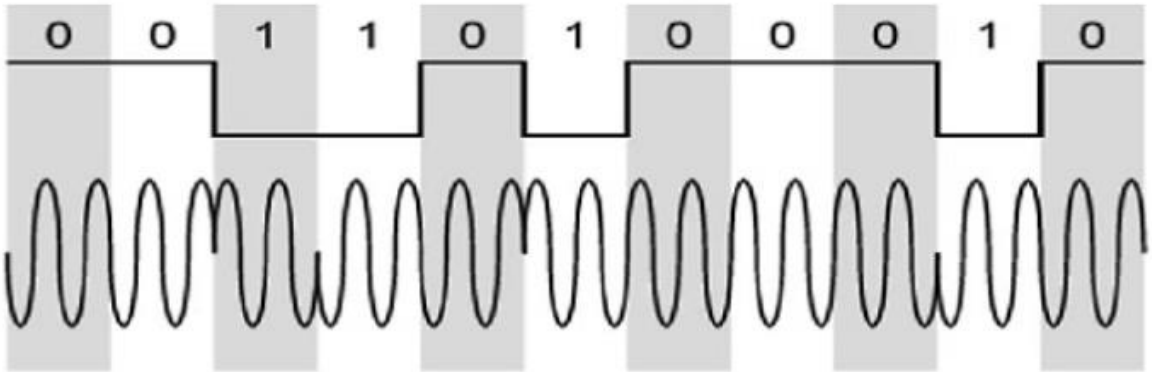

It is seen from the above figure that, if the data bit is Low i.e., 0, then the phase of the signal is not reversed, but continued as it was. If the data is a High i.e., 1, then the phase of the signal is reversed, as with NRZ-I, invert on 1 (a form of differential encoding).

If we observe the above waveform, we can say that the High state represents an **M** in the modulating signal and the Low state represents a **W** in the modulating signal.

DPSK Modulator

DPSK is a technique of BPSK, in which there is no reference phase signal. Here, the transmitted signal itself can be used as a reference signal. Following is the diagram of DPSK Modulator.

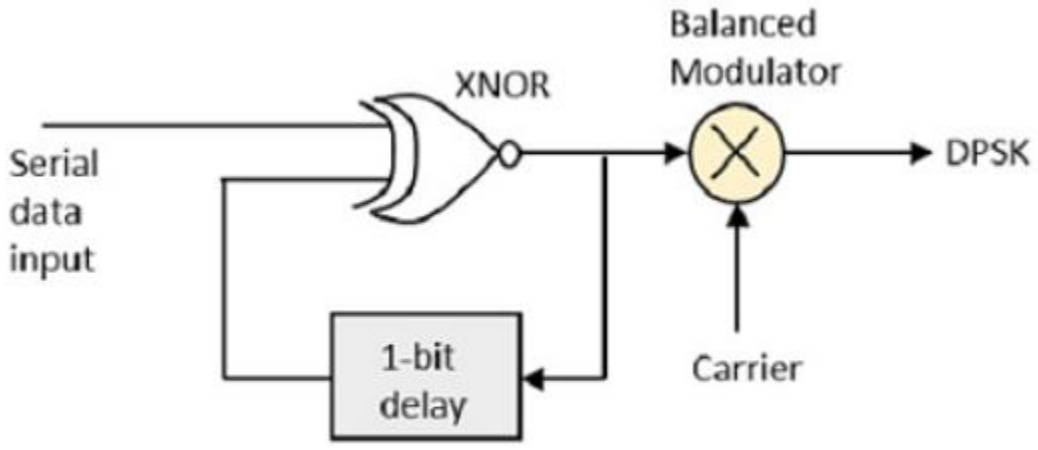

DPSK Modulator

DPSK encodes two distinct signals, i.e., the carrier and the modulating signal with 180° phase shift each. The serial data input is given to the XNOR gate and the output is again fed back to the other input through 1-bit delay. The output of the XNOR gate along with the carrier signal is given to the balance modulator, to produce the DPSK modulated signal.

QAM (Quadrature Amplitude Modulation)

QAM, which stands for **Quadrature Amplitude Modulation**, is a digital modulation scheme that encodes data by varying both the amplitude and phase of a carrier wave. This allows for more efficient use of bandwidth compared to modulation techniques that only alter amplitude or phase individually, making it a popular choice in modern communication systems.

What is QAM?

- A form of modulation which is widely used for modulating data signals onto a carrier used for radio communications.
- QAM is a signal in which two carriers shifted in phase by 90 degrees are modulated.
- The resultant output consists of both amplitude and phase variations.
- Hence it may also be considered as a mixture of amplitude and phase modulation.

Why QAM?

- The main aim is to save the bandwidth.

How?

- Double sideband(DSB) even with a suppressed carrier occupies twice the bandwidth of the modulating signal.
- This is very wasteful of the available frequency spectrum.
- QAM places two independent double sideband suppressed carrier signals in the same spectrum as one ordinary double sideband suppressed carrier signal.

TYPES OF QAM

- It exists in both **analogue** and **digital** formats.
- The analogue versions of QAM are typically used to allow multiple analogue signals to be carried on a single carrier.
- It combines phase modulation and amplitude modulation in a form of modulation known as quadrature amplitude modulation, QAM
- Digital formats of QAM are often referred to as “Quantised QAM”.
- It combines phase shift keying and amplitude keying in a form of modulation known as quadrature amplitude modulation, QAM

QAM MODULATOR

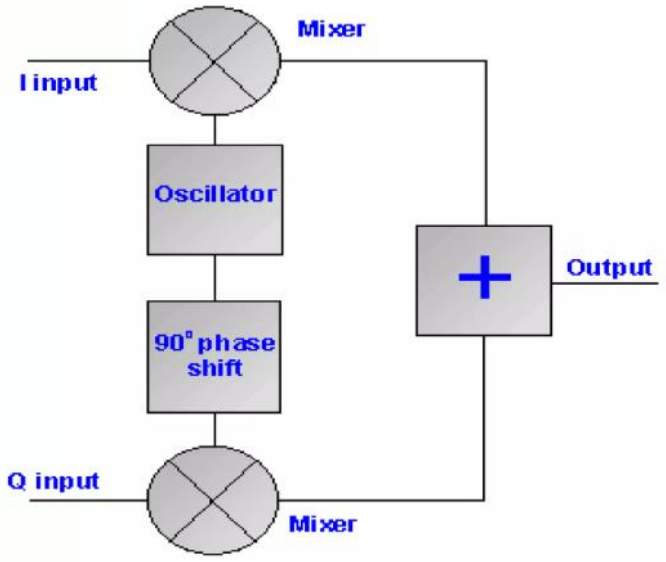

QAM THEORY

- Quadrature amplitude theory states that both amplitude and phase change within a QAM signal.
- The basic way in which a QAM signal can be generated is to generate two signals that are 90° out of phase with each other and then sum them.
- This will generate a signal that is the sum of both waves, which has a certain amplitude resulting from the sum of both signals and a phase which again is dependent upon the sum of the signals.

QAM THEORY….

- As there are two RF carrier signals that can be modulated, these are referred to as the **I - In-phase and Q - Quadrature signals.**

- The I and Q signals can be represented by the equations below:

$$I = A\cos(\Psi)$$
$$Q = A\sin(\Psi)$$

- It can be seen that the I and Q components are represented as cosine and sine. This is because the two signals are 90° out of phase with one another.

QAM Modulator

- The modulator is used to encode the signal, often data, onto the radio frequency carrier that is to be transmitted.

- The QAM modulator essentially follows the idea that can be seen from the basic QAM theory where there are two carrier signals with a phase shift of 90° between them.
- These are then amplitude modulated with the two data streams known as the I or In-phase and the Q or quadrature data streams.

Aspect	Encoding	Modulation
Purpose	To **convert data** into a suitable digital format for storage or transmission.	To **shift the signal** to a specific frequency range for reliable transmission over physical media.
Type of Data	Digital → Digital transformation.	Digital or Analog → Carrier Wave (Analog) transformation.
Operation	Changes the **format** of data using specific codes or schemes (e.g., PCM, NRZ, Manchester Encoding).	Alters a high-frequency **carrier wave** using message signal (Amplitude, Frequency, or Phase).
Example Tasks	- Pulse Code Modulation (PCM) - ASCII Encoding - Line Encoding (NRZ, RZ, Manchester)	- Amplitude Modulation (AM) - Frequency Modulation (FM) - Phase Modulation (PM) - QAM (Digital Modulation)
Main Goal	For **data storage, compression, or digital transmission**.	For **efficient and reliable transmission** over long distances or specific channels.

Aspect	Encoding	Modulation
Where Used	Inside computers, digital systems, or in digital communication protocols (USB, Ethernet).	In telecommunication systems, radio, TV, satellite, wireless networks.
Signal Type	Operates directly on digital data or sampled/quantized signals.	Always involves a **carrier wave** (typically analog sinusoid).
Output	Digital encoded signals (like bit streams, PCM codes).	Modulated analog wave ready for transmission over channel.